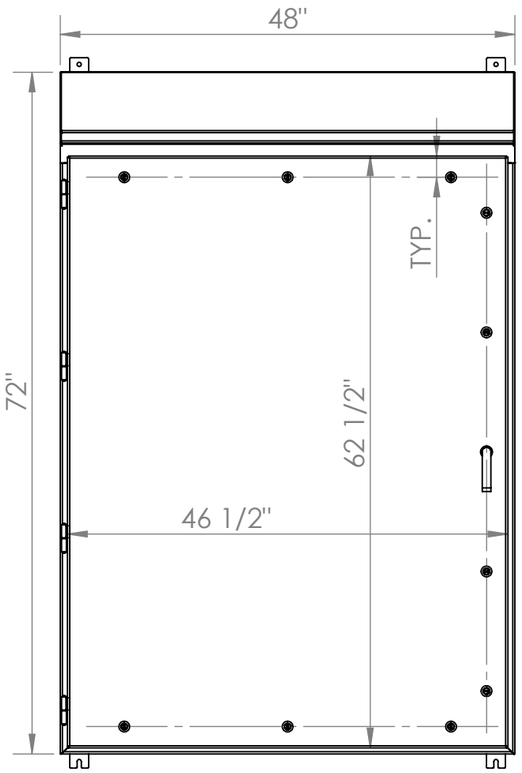

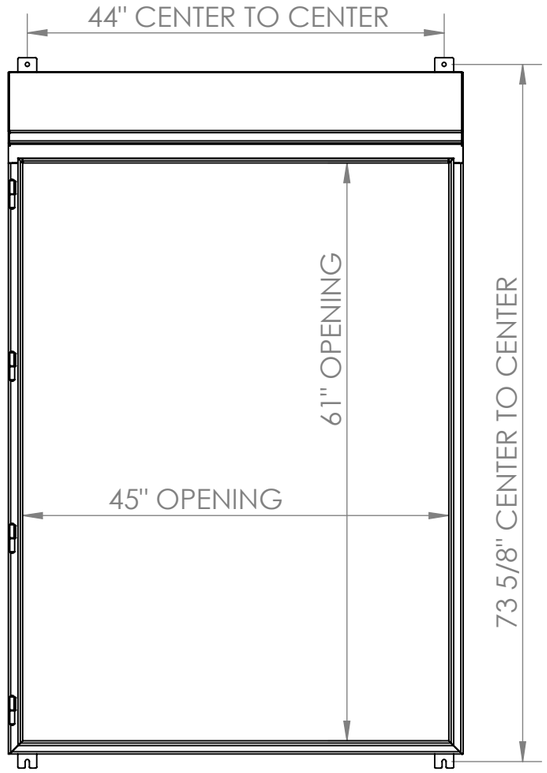

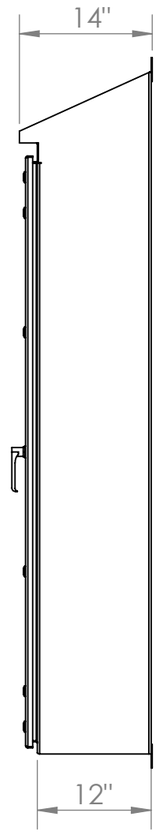

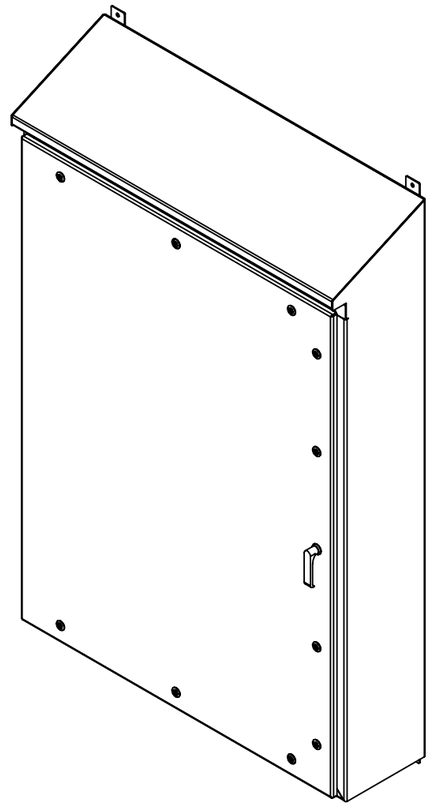

JOB NUMBER: #

PROJECT MANAGER:
WORK: (715) 235-5472 EXT.
CELL:
EMAIL: @midweststainless.com

DESIGNER:
WORK: (715) 235-5472 EXT.
CELL:
EMAIL: @midweststainless.com

DOOR HIDDEN
TO SHOW PANEL OPENING

NOTE:
1. ENCLOSURE TO BE FABRICATED FROM 12 GA. SHEET; #4 ONE SIDE; T304
2. EXTERIOR #4 POLISH & ALL WELDS GROUND & POLISHED
3. INTERIOR 2B FINISH
4. **SUB PANEL SIZE** - 60 3/4" x 44 3/4"

HARDWARE:
1. **HINGE** - GUDEN; SSWMO32 FP
2. **QUARTER TURN** - SIERRA PACIFIC; 41-005ST; 12C26 LATCH
3. **HANDLE** - DIRAK; 7-103 QUARTER TURN WITH HANDLE PR20.1 L18

ISSUED FOR REVIEW	A	–	–	–
DESCRIPTION	REV	DATE	BY	ENG.

REVISION HISTORY

MIDWEST STAINLESS TECHNOLOGIES™
5408 3M Drive, Suite 1
Menomonie, WI 54751
Ph: (715)235-5472
Fax: (715)235-5484

Turnkey Process & CIP Systems
Stainless Steel Equipment & Installation
Professional Workmanship

SCALE NTS	CUSTOMER –
DATE –	–
DRAWN BY –	DESCRIPTION –
CHECKED BY –	ST72H48W12D-304UL4X – ENCLOSURE
ENG./APPROVED BY –	DRAWING NUMBER ST72H48W12D-304UL4X
SHEET 1 OF 1	REV. A

THIS DRAWING AND SPECIFICATIONS ARE THE PROPERTY OF MIDWEST STAINLESS TECHNOLOGIES LLC., AND SHALL NOT BE REPRODUCED, COPIED OR USED IN WHOLE OR PART AS THE BASIS FOR THE MANUFACTURE OR SALE OF ITEMS WITHOUT WRITTEN PERMISSION.